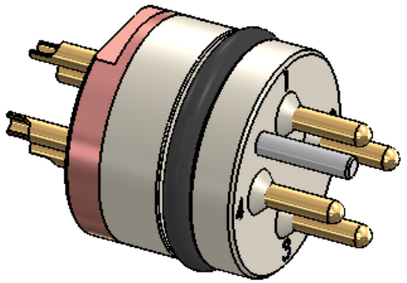

PRESSURE

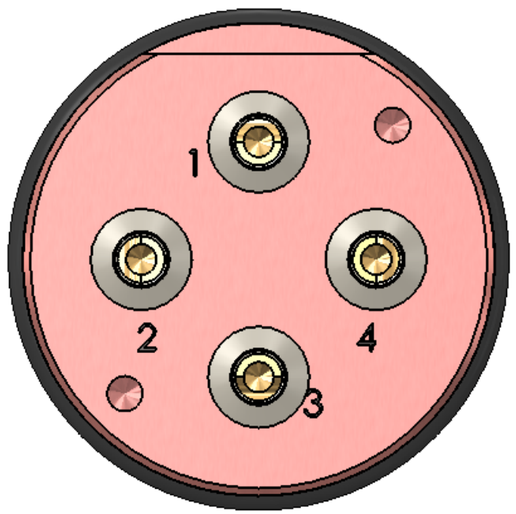

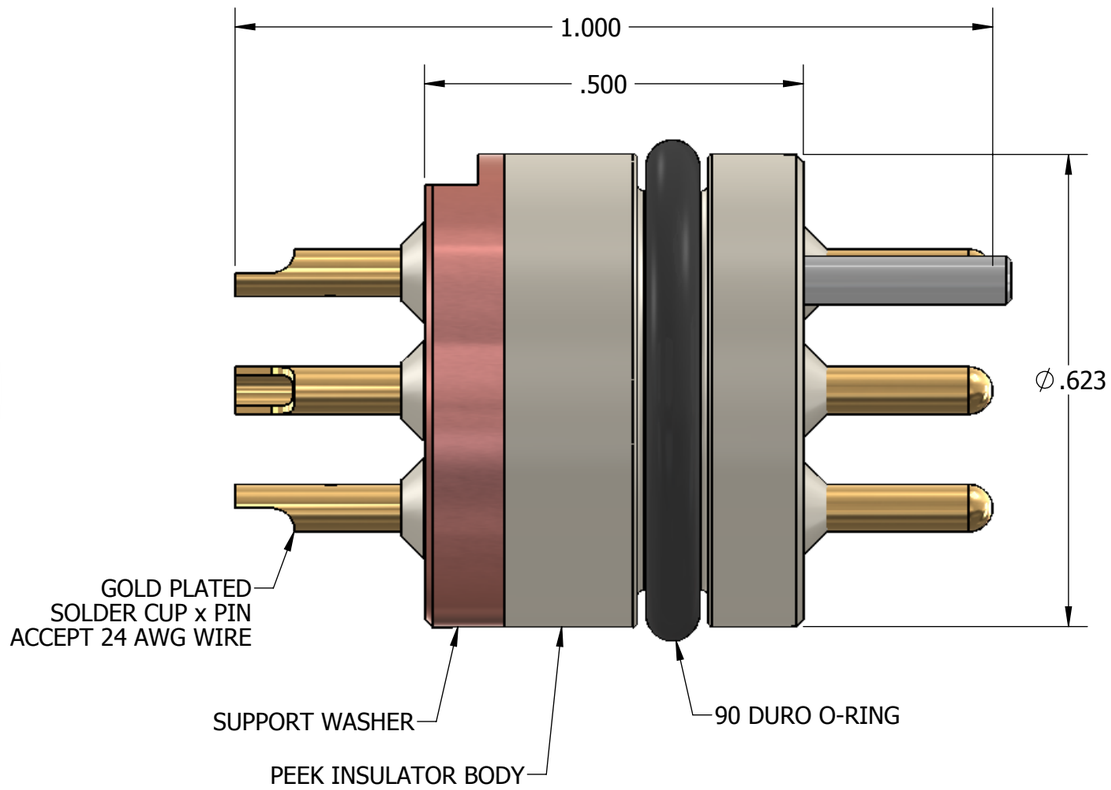

PROPERTIES:

1. TEMPERATURE RATING: 392˚F (200˚C)

   CURRENT: 2 AMPS MAX

   INSULATION RESISTANCE = 500M Ω @ 500VDC
2. PRESSURE RATING: 20 KSI
3. CONTACTS ARE GOLD PLATED PER CANYON SPEC: QP-ENG-7.4-001 CURRENT REVISION.

Canyon Manufacturing Services, Inc.

TITLE: CONNECTOR, 4 PIN BULKHEAD,
24 AWG SOLDER CUP TO PIN,
.625 DIA, FLAT MOUNT

925-0220-01