REVISIONS			
REV.	DESCRIPTION	DATE	APPROVED
A	RELEASE WITH CUSTOMER SUPPLIED STRIP CONNECTOR	12/14/2021	SWright

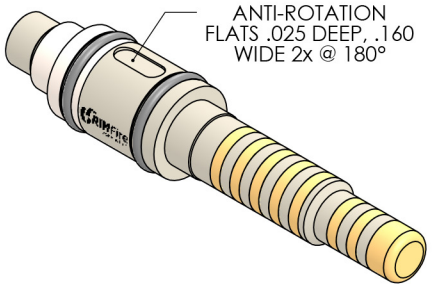

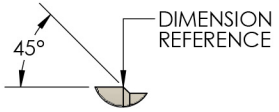

DETAIL A

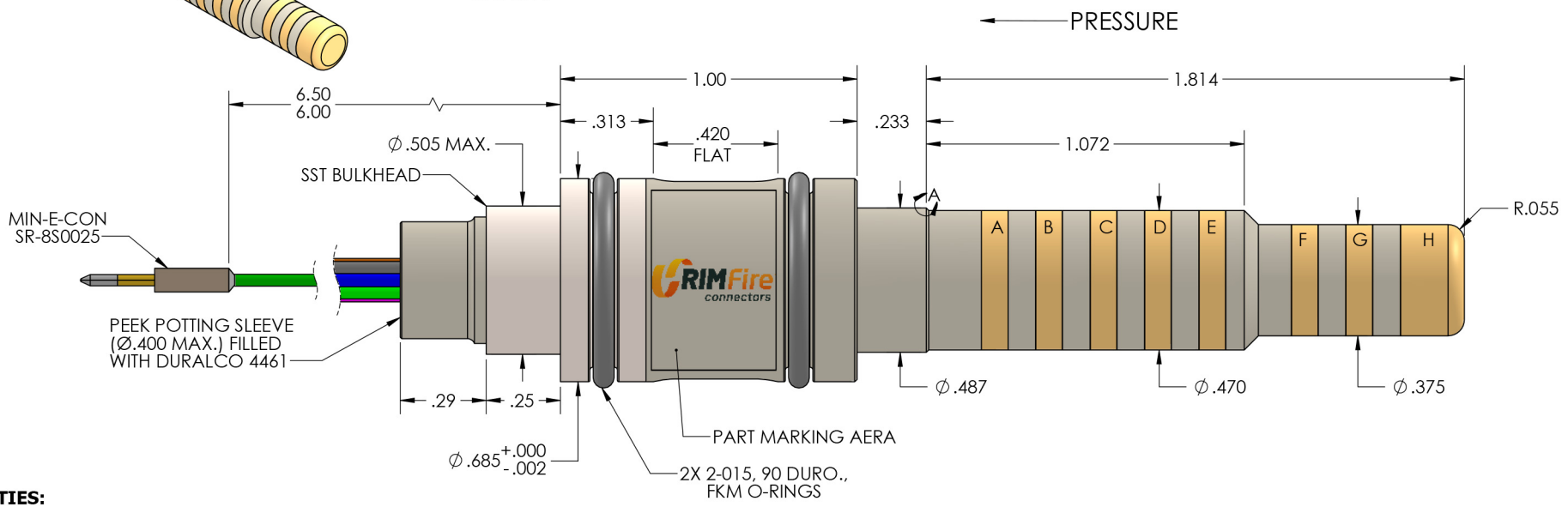

PROPERTIES:

1. PRESSURE RATING = 20,000 PSI & TEMPERATURE RATING = 392°F (200°C)
   CURRENT: 2 AMPS MAX
   INSULATION RESISTANCE = 500M Ω @ 500VDC
   SEAL BORE IS .687 Ø +.002, -.000

2. CONTACTS ARE GOLD PLATED PER CANYON SPEC: QP-ENG-7.4-001 CURRENT REVISION.

3. INSERTION TESTING: 5000 CYCLES ROTATING @ 5 RPM'S.

4. HALT TESTING:
   COLD STEP STRESS, HOT STEP STRESS, RAPID THERMAL CYCLE,
   VIBRATION STEP STRESS & COMBINED THERMAL AND VIBRATION.

   ENVIRONMENTAL CONDITIONS OF HALT TESTING:
   TEMPERATURE RANGE: -40˚C TO +200˚C
   VIBRATION: UP TO 80 Grms

WIRING DIAGRAM

ROTATABLE CONTACT	WIRE SIZE	COLOR
A	24 AWG	RED
B	24 AWG	BLACK
C	24 AWG	WHITE
D	24 AWG	ORANGE
E	24 AWG	YELLOW
F	24 AWG	BROWN
G	<NOT USED	--
H	24 AWG	GREEN

MIN-E-CON
HARNESS

Canyon Manufacturing Services, Inc.

TITLE:
ASSEMBLY, 8-CONDUCTOR
ROTATABLE HT/HP
915-0353-08, REV A, SALES